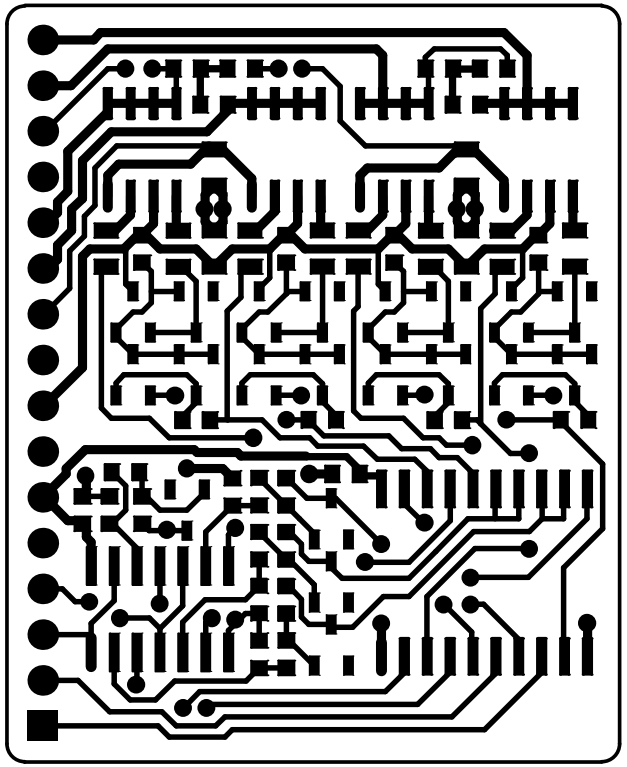

Top Layer

Board outline

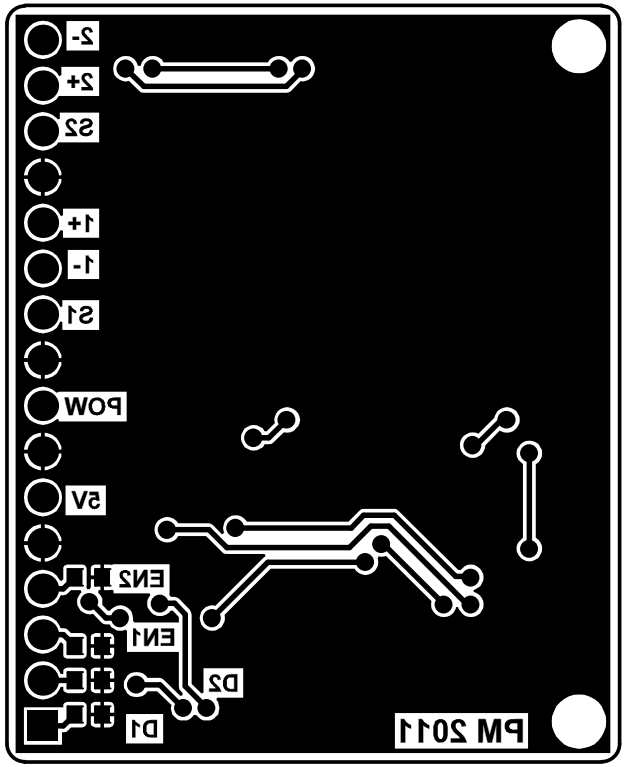

Bottom Layer

Board outline

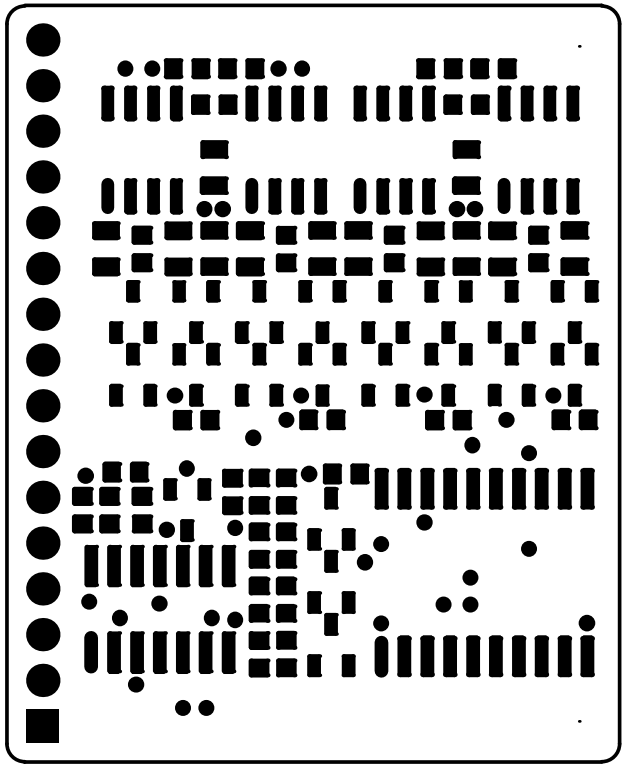

Top Solder

Board outline

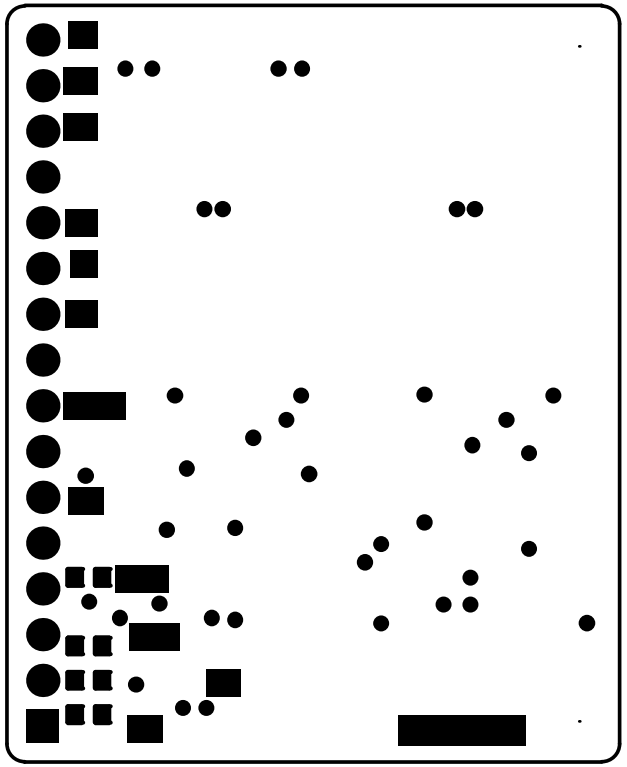

Bottom Solder

Board outline

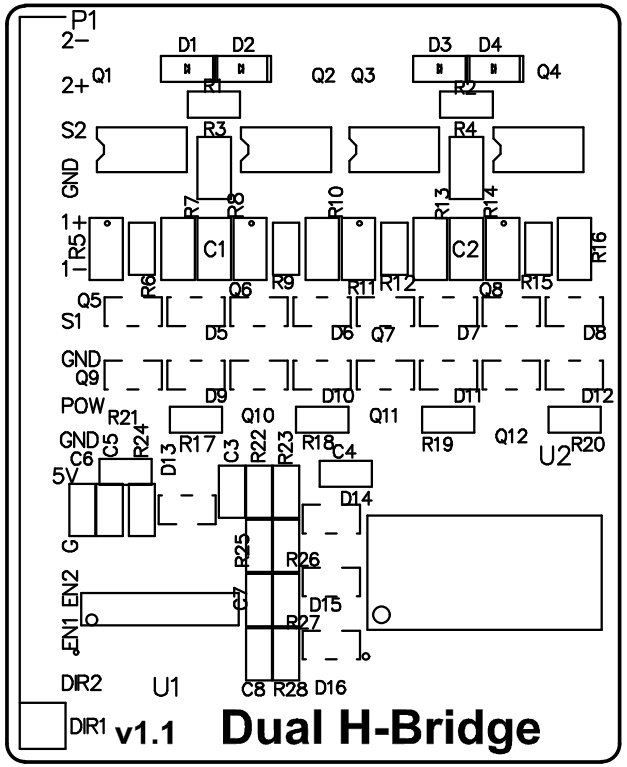

Top Overlay

Board outline

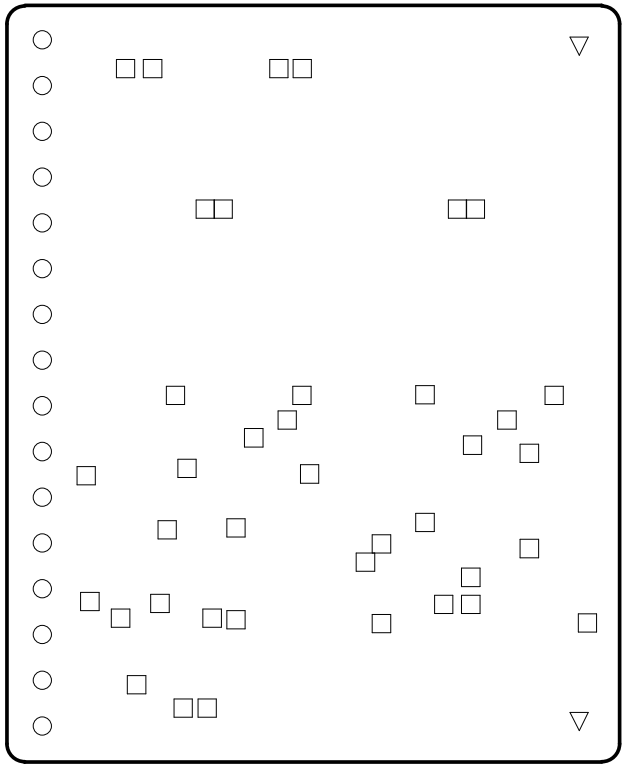

Symbol	Hit Count	Tool Size	Plated	Hole Type
□	39	0.5mm (19.685mil)	PTH	Round
○	16	1mm (39.37mil)	PTH	Round
▽	2	2.6mm (102.362mil)	NPTH	Round
	57 Total			

Board outline Drill Drawing